YCQR2 series

Intelligent motor soft starter

OPERATION INSTRUCTION

Standard: GB 14048.6

CNC Deliver Power For Better Life

⚠ Before installing and using this product, please read this manual carefully and pay more attention to safety.

Contents

Safety Notice ---------- 1
Usage and Environment Condition ---------- 2
Ⅰ.Summary ---------- 3
Typical Application ---------- 4
Functions of YCQR2 Soft Starter ---------- 4
Ⅱ. Purchase Checking ---------- 5
Ⅲ. Installation ---------- 5
Ⅳ. Circuit Connection ---------- 6
1)Master Loop ---------- 6
2)Control Terminal ---------- 6
3)Controlling Circuit Terminal Connection ---------- 6-8
4)Communication port and analog current signal output ---------- 9
5)Remote Control Panel ---------- 9
6)Master Loop Connection ---------- 10
7)Basic Circuit Chart and Terminals ---------- 10
Ⅴ. Key Board and Display Illumination ---------- 11-14
Ⅵ. How to Input Ex-work Parameter ---------- 14-15
Ⅶ.Electrification and Operation ---------- 16
Ⅷ. Illumination for Fault Display ---------- 16
Ⅸ. Soft Start Control Mode ---------- 17-18
Ⅹ. Structure Characteristic ---------- 18-20
Ⅺ..Main Technical Parameter of FKR1 Series Soft Starter ---------- 21
Ⅻ. Applicable Occasion (for customer reference) ---------- 21
XIII. Basic Connection Principle Chart ---------- 22
XIV. FKR1 Secondary Connection Chart ---------- 23-26
XV. Fault Elimination ---------- 27

Safety Notice

Electric Shock Avoidance

After the input terminal of YCQR2soft starter is connected to power supply, in case of load open circuit or out-of-phase, even if it is not in working condition, the output terminal still could bring quite high inductive voltage. So that please don't touch the output terminal , or there is a danger of electric shock.

Inductive Voltage

The inductive voltage from the output terminal of YCQR2soft starter is a normal phenomenon, which doesn't affect the using. The inductive voltage is generated by electricity leakage of silicon controlled(semi-conductor elements like silicon controlled, GTR, IGBT etc suffer electricity leakage in degree.)and alternating electrification of dv/dt capacitance-resistance filter loop。 Making a zero-point measurement by voltmeter，the voltage is about 100-200v (relative with voltmeter internal resistance). The load capability of this inductive voltage is very small, it will disappear after the output is connected to the load.

Compensation Capacitor

Reactive power compensation capacitor, which is used for enhancing the power factor must be connected to the input terminal of the YCQR2soft starter, and should not be connected to the output terminal, or the silicon controlled power elements may be damaged.

Megohm Meter

Don't use mogohm meter to measure the insulating resistance between the input and output of the YCQR2 soft starter, or the silicon controlled and the control board may be damaged for over pressure.

Input & Output

Don't connect the input and output of the main loop contrarily, or it may cause the soft starter to act unexpectedly.

Bypass Phase Sequence

When using the bypass contactor, the phase sequence of start loop and the said road loop should be consistent, or interphase short circuit will happen in case of switching over of bypass, which may cause the air circuit breaker to trip and even destroy the equipment.

Low Voltage Class

As terminal 7,8,9 and 10 use inner working voltage, they should not be connected with any outer voltage, or the inner circuit of soft starter may be damaged.

Soft Starter Working Voltage Class

As terminal 12 and 13 use outer AC 220V working voltage, they should not be connected with any other power supply of class voltage, or the inner circuit of soft starter may be damaged.

Usage and Environment Condition

【incoming line power supply】	AC380V±15%(660V) 50/60HZ
【Control power supply】	AC220V±15% 50HZ 0.15A
【Applicable Electric Motor】	three-phase squirrel-cage type asynchronous electromotor
【Start Frequency】	Less than 12 times per hour
【Cooling Mode】	Natural wind
【Temperature】	-30℃-55℃
【Humidity】	90% without frost
【Applicable Occasion】	Good ventilation room without corrosive gas or conductive dust.
【Elevation /Vibration】	altitude ≤3000m, vibratory force device ≤ 0.5G
【Safety Class】	IP20-IP30

1 Summary

AC squirrel-cage type asynchronous electric motor is a popular electric apparatus. By applying intelligent, the apparatus completes stable load making capacity and reduces impact strength to electrical network; it can work with stable and reliable performance. YCQR2 Model soft starter completes Human-machine interface. Applied to a scope of 5.5~600KW in thermal power plant, hydraulic power plant, metallurgy, chemical industry, architecture , cement plant ,mining industry as well as environmental protection projects. It's the ideal replacer of Y-△ Starter, reactor starter, auto-transformer starter etc.

The advanced technology applied prevents the heavy starting current of AC electric motor, influence to voltage quality and power consumption in loop as well as the impact strength to electric apparatus.

Microprocessor is core of YCQR2soft starter. It controls big power thyristor components, to limit starting current, voltage ramp start, soft stop. Technical parameters can be set depending different load. It also has over current, overload and out-of-phase protections. Output voltage of soft start is ascending as per setups, then electric motor torque finish starting according to optimized speed-up curve, thyristor components breaks, and bypass AC contact starts.

Typical application:

Pump: the pump control function

To reduce water hammer phenomenon caused by hydraulic impact, thus can reduce the maintenance cost.

Ball mill: by using voltage ramp starting, reduce abrasion of gear torsion, maintenance cost.

Wind generator: reduce belt abrasion and mechanical impact, thus reduces maintenance cost.

Compressor: limiting current function

Smooth starting reduces the thermal effect of electric motor and make longer lifetime of apparatus.

Crusher: blocked protection and high-speed protection functions

To avoid mechanical fault and blocked that may cause thermal damage.

Distribution mechanism: soft start and preset low-speed operation

Smooth and gradual starting can prevent reset and liquid leakage.

Functions of YCQR2 Soft Starter

1)Double Single-chip machine automatic digital control;
2)Parameters like starting torsion current, voltage, and time to be set according to different load, to obtain optimal torque control feature.
3)Smooth and gradual starting process, to reduce the impact strength of electric network, vibration and noise of apparatus, to lengthen lifetime of mechanical driver and to improve working environment.
4)Starting current is adjustable as per load, to reduce starting consumption and to make optimal torque with smallest current.
5)Soft stop function make long lifetime of electric contacts, meet mechanical requirements under various occasions.
6)Over-current protection, overload protection and thermal protection, out-ofphase protection.
7)Extrocontrol interface to facilitate multi-functions: digital delayed start, transient stop control input, start output of time delay relay, fault relay output.
8)No special requirements on the phase sequence to input power.
9)Free stop and soft stop, soft stop time is adjustable.
10)Complete digital control and extrocontrol
11)Standard 485 interface
12)Output 0-20MA analog current
13)Innovative structure, small volume, stable performance, easy installation and operation.
14)Harvard type single-chip machine has strong anti-interruption capacity to prevent the control system from severe electric interruption.

Ⅱ. Purchase Checking

Please make the following check after opening the case:
1)Check the nameplate to confirm it is what you ordered.

2)Model and Meaning

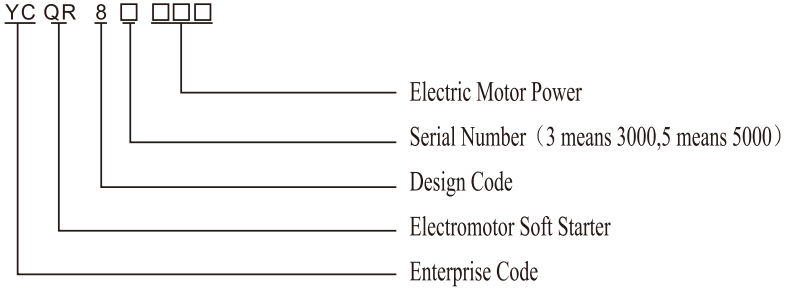

Ⅲ. Installation

Installing Direction and Space

1)Installing Direction

For the purpose of cooling, the soft starter should be installed in vertical direction.

2)Installing space

For the purpose of the good thermolysis performance，there should be enough space for thermolysis around the soft starter.

Ⅳ. Circuit Connection

1) Master Loop

Terminal Mark	Terminal Name	Note
R S T	power supply terminal of main loop	Connection with three-phase power supply, main loop
U V W	Starter output terminal	Connection with three-phase electromotor
L21 L22 L23	connection with bypass contactor	Connection with incoming line terminal of AC contactor

2）Control Terminal

Terminal No .	Terminal Number	Note
1 2	bypass relay terminal	Used to switch over to bypass contactor after start
3 4	Fault signal output	shut in case of fault (relay contact output)
5 6	Operation signal output	Connect after start delay(relay contact output)
7	Transient stop input terminal	Cut off with 10 and enter in fault stop （Passive）
8	Soft stop input terminal	Cut off with 10 and enter in soft stop condition(passive)
9	Starter input terminal	Put through with 10 and motor start to operate (passive)
10	Common point input terminal	Common terminal for contact point signal input
11	Earthing terminal	functional earthing
12 13	controlling power supply input terminal	connected with AC 220V power supply

Note: Output relay contact capacity AC 250V 5A

3)Controlling Circuit Terminal Connection

◎ When the user uses the outer terminal, it should be introduced from terminal bar by shield controlling line.

◎ In order to avoid the electromagnetism disturbance, the controlling active line should be avoid electric motor cable and other strong electricity loop. Otherwise, it should be crossed vertically with the strong electricity loop.

3-1) After starting operation, the BY-PASS relay close, terminal No.1 connects to terminal No. 2, (Reference Chart 3.1), the by-pass contact(KM)closes. When the stop signal send out, inside contact disconnects.

Contact capacity: AC 250V 5A

Notes: plus a resistance-capacitance group on contact coil to store peak vo ltage as the contact connects to reduce interruption to single-chip machine.

3-2) fault signal-BREAK, terminal No.3,No.4

Equipped with normal open contact points, it closes with fault.

Technical data: AC 250V 5A

3-3) chain time delay relay-CHAIN, terminal No. 5, NO. 6

Equipped with normal open relay contact point, it closes at 0~240s after it starts.(Setup functional code 5)

3-4) entry momentary stop- EMS, terminal No.7

Input External fault signal, to protect external thermal relay. During operation, this terminal should connect to terminal No.10, when stops, terminals disconnects. By setup different value to functional code 6, value 0- the terminal connects, value 1 - the terminal disconnect.

When functional code 7 is 1, press “reset”; 0 is automatic reset, then connect EMS terminal and start.

3-5) three-wire control, terminal No.8 (STOP), No.9 (RUN), No.10 (COM)

This mode is applied to outer control for Run and Stop (see picture 3.2)

When functional code 9 setting is 2 or 3, this mode is applicable.

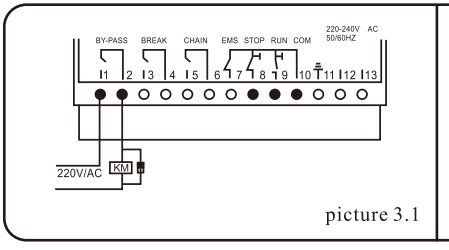

picture 3.1

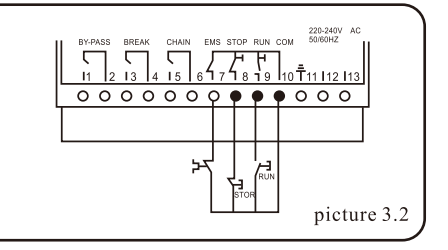

picture 3.2

3-6) double-wire control,

① the user may use a switch or PL,PLC to Run and Stop a starter, then this control mode is applicable. Close J, soft starter Run, open J, it Stop.(see picture 3.3)

② Functional code 9 setting 2.

③ when starter fault, reset can be realized by two modes, by keyboard or Switch J.

④ Delayed start

It may happen sometimes that soft starter should be start after certain time of delay, this function is applicable under such circumstances (functional code 3 setting delayed). When 9-10 closes, and counter down to 0, soft starter runs.

3-7) earthing terminal No.11

Connect it to grounded subpanel.

Apparatus which is over 90KW shall ground by external enclosure, thus this terminal is idle.

3-8) Power supply terminal No.12, No.13

Connect neutral point (N) to No.13, L to No.12 (see picture 3.4), voltage AC 220V. The voltage is also available by using an isolated transformer feed from master circuit.

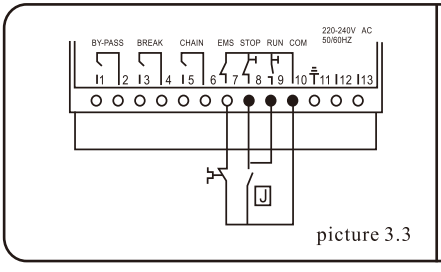

picture 3.3

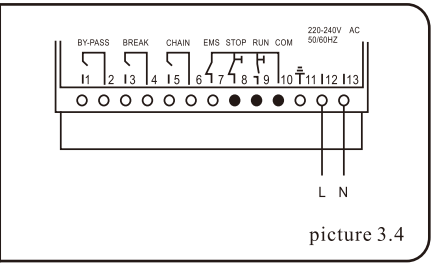

picture 3.4

4) Communication port and analog current signal output 0-20MA (picture 4.5.1)

4-1) standard 485 port is connected to upper PC to make soft start, STOP, and temporary control of working current and fault etc.

Port No.1: X1 Outer1+5V

Port No.4: X4 receiver input conversely and converse output (B) of driver.

Port No.5: X5 signal port

Port No.6: X6 receiver input and output (A) of driver.

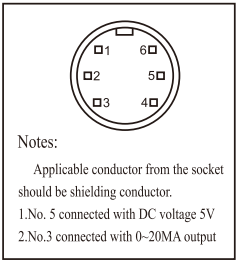

picture 4.5.1

4-2) Multi-machines communication, the max quantity of subsidiary is 30 sets, and max communication wire reaches to 1Hkm.

4-3) when serial-port is used, functional code 9 setup 4&5&6, functional code C setup is local address (1-30).

4-4) 0~20MA Analog current signal output

485 port2: X2 output cathode current, 485 port3: X3 output anode current, this signal reflects electric motor current, transmission pass by control center. Analog current and electric motor current is calculated as per:

Y%=D/20×10×% Y: Electric motor current (%)

D: Scale, 130- as functional code AO=1, temporary test runs.

400- As functional code AO=0, temporary test is started.

5) Remote Control Panel

Remote control panel is optional, 485 ports contains 4 signal wires, Using shielding wire to connect them to socket as per picture 4.5.2. The operation panel works same to main panel with same functions. Functional code 9 setup is 4&5&6, Functional code c setup is 1.

picture 4.5.2

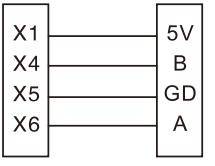

profile of soft start profile of operation panel

Ⅵ.Master Loop Connection

Refers to picture 4.6 for Module connection of soft starter, connect upper to terminal R,S,T (random phase sequence). The E terminal should be grounded, lower output U, V, W are connected to electric motor. After trail run, change two of R, S, T or U, V, W to change the electric motor direction.

Ⅶ.Warning

- Connection R, S, T to U, V, and W is prohibited.
- Connection U, V, W to capacitors is prohibited; otherwise it will damage the starter.
- Make sure the phase sequence between contact and soft starter are correct, otherwise, when soft starter closes, short-circuit occurs.

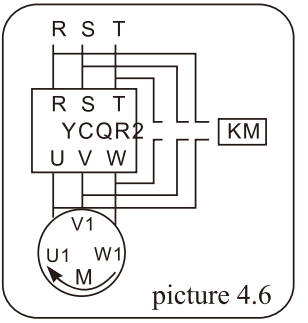

picture 4.6

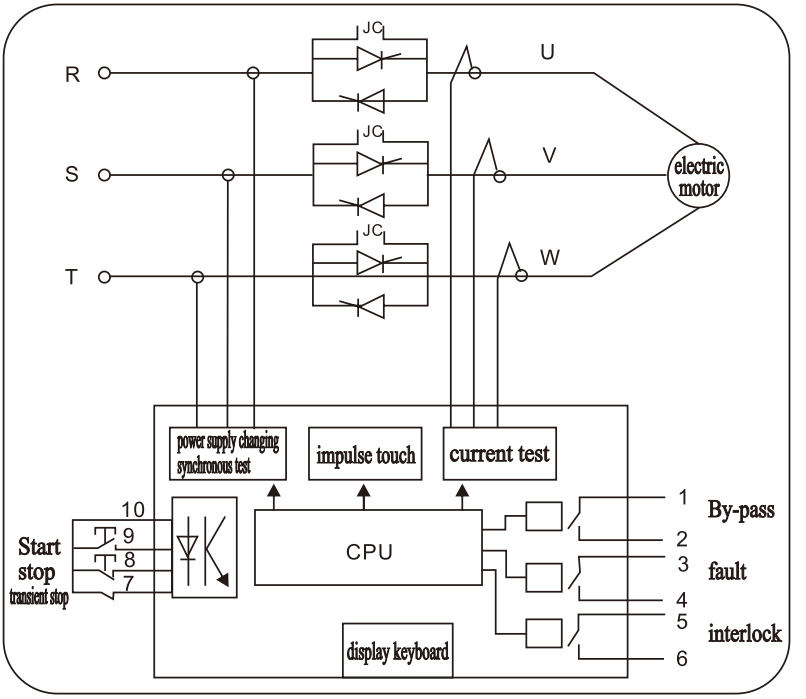

Ⅴ. Key Board and Display Illumination

YCQR2 -5000 series starter owns six controlling keys and liquid crystal screen, please see following picture:

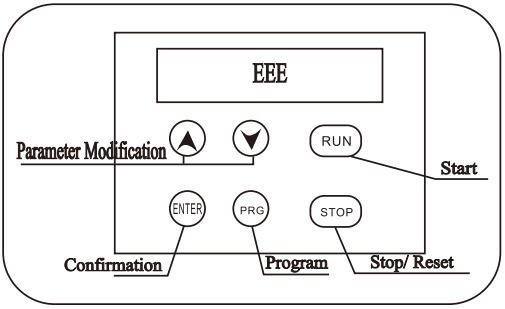

1）Illumination for each key

RUN——Start Key

Pressing RUN can start the motor in the ready condition. STOP-Stop/ Reset The motor stops running when pressing key STOP/RST in the condition of running, pressing STOP/RST can return to ready situation in the programming or fault condition.

PRG——Program Key

Pressing PRG can enter the program in the ready condition (displaying READY); pressing this key after data modification, the data will be reserved.

ENTER——Confirmation Key

Pressing this key in programming condition to modify data or exit modification

∧.∨——Plus and Minus Key

Data plus or Minus; pressing the key continuously will speed up the data changing.

STOP——Stop/Reset Key

Pressing this key in operation condition, the motor will stop; pressing it in programming condition for reset.

2）YCQR2 Series Function Illumination:

Function		Set Range	Factory Value	Illumination
Code	Name			
0	Start Voltage	30-80%	30%	Voltage mode effective
1	Rising Time	0-60S	10S	Voltage mode effective
2	Soft Stop Time	0-60S	2S	Stop freely when set as 0
3	Start Delay	0-240S	0S	Two lines way effective
4	Limiting start current	150-500%	250%	Limiting current mode effective
5	Interlock delay	0-240S	0S	
6	Transient stop set	0-1	0	0:yes 1: no
7	Restart after transient stop	0-1	0	0:yes 1: no
8	Control mode	0-1	1	0:limiting current 1:voltage
9	Control way	1-6	1	1:keyboard 2:outer control 3:keyboard+outer control 4: PC 5:PC+keyboard 6:PC+outer control
A	0-20mA	0-1	0	0:full scale(20mA)corresponding to 400% 1: full scale(20mA) corresponding to 130%
B	Display Mode	0-132	0	0:by percent of rated voltage XXX: actual rated power value
C	Local Address	1-30	0	For serial-port communication
D	Set parameter modification	0-1	0	0:yes 1:no
E	Overload multiple set	50-200%	150%	
F	Out-of-phase protection	0-1	0	0:yes 1:no
EY	Modification set protection	The data should not be modified in this condition.		
-A	Start and rising condition	1.displaying current value XXXA or percent of rated value. 2.Delay start time displays time EOTTT		
-A	Operation condition			
-A	Soft stop condition			

Note: Values XO-9.

Even if using the voltage mode, the limiting current is still effective, and its value is 400%.

2-1) code 0 (start voltage)

start control parameter under voltage mode, to enlarge start current so as to overcome breakout friction.

2-2) code 1 (ascending time)

Ascending of start voltage, it is effective under voltage start mode, code 8 (control mode) setup 1 (voltage mode).

2-3) code 2(soft stop)

stop time setup is 0, free stop, stop too long will cause system unstable.

2-4) code 3 (delayed start) t

o set up time from starter closed to starter runs by extrocontrol (double-line control), functional code 9 (control mode) setup is 2 (extrocontrol). when extrocontrol terminal closed, and counter down to 0, the starter initiates.

2-5) code 4 (limiting start current)

Code 8(control mode) setup is 0(limiting current), starting current is 100%~500%. After start operation, recover to rated value.

2-6) code 5 (delayed interlocking)

interlocking output is controlled by programmed value (terminal No.5 and No.6); the value is equal to the time from starter starts to closedown of the terminals (No5. and No.6).

2-7) code 6(transient setting)

to connect and disconnect extrocontrol mode of transient input, 0 is connected, then the 7 connect to 10, 1 is disconnected then the 7 disconnect to 10.

2-8) code 7 (restart after transient stop)

0- direct restart after transient stop 1- Restart after reset

2-9) code 8(control mode)

0(limiting current mode) limiting current at starter initiates (reference 2-5)

1(voltage mode) voltage ramping ascending till complete started (reference 2-1)

2-10) code 9 (control method)

1: by keyboard

2: by extrocontrol double-line and three-line controlled by external keys

3: by keyboard+ extrocontrol external connection should be provided.

2-11) B (display mode)

0-display current percentage and actual starter power (actual running current). Maximum power is 132kW; above power should be setup 0

2-12) D (parameter modification) extrocontrol

0: modification allowed

1: modification prohibited.

2-13) E (setup overload times)

To setup overload times of electric motor and electric motor over current protection

2-14) F (out-of phase protection)

0: out-of phase protection not available, starter works when out-of-phase

1: out-of phase protection available, starter stops when out-of-phase

3) Structure and work principle

The structure is divided into two kinds:

YCQR2 has two start modes: limiting current start and voltage ramping start. Display and setup parameters is easy and is connected to upper PC for communication. To control soft start, soft stop, it can monitor fault and running current. The 4-20MA analog signal access is provided to monitor running current in control center. Protection functions include over current protection, out-of-phase protection. Incoming and outgoing connection: incoming in upper 6, and outgoing in lower 3.

Work principle and features:

YCQR2 serials electric motor soft starter adopts three pairs of thyristor which connected in serial with three phases on electric motor. By using the thyristor and electric switch to control voltage, and the process of electric motor starting. When the electric motor started and reach rated voltage, the by-pass contact connected to start electric motor directly. By two single-chip machines in YCQR2 electric motors, starting parameters can be setup according to different load. Thus it is adaptable to different load.

Ⅵ. How to Input Ex-work Parameter

1) If there is a parameter mistake, reset as per the following:

1-1) cut-down power supply

1-2) press PRG button

1-3) connect power, release PRG button, all parameters is reset by factory value

2) The setting preserves well even power-off

3) When factory parameter of soft starter does not fit to load, operate as per the following steps (e.g.: modify start limiting current)

3-1) press “program”—press “△” four times -press “entry” press “△” or “▽” to modify press “program” (store data)— “entry” - “stop” / reset(ended).

3-2) Operation Chart in Working Condition

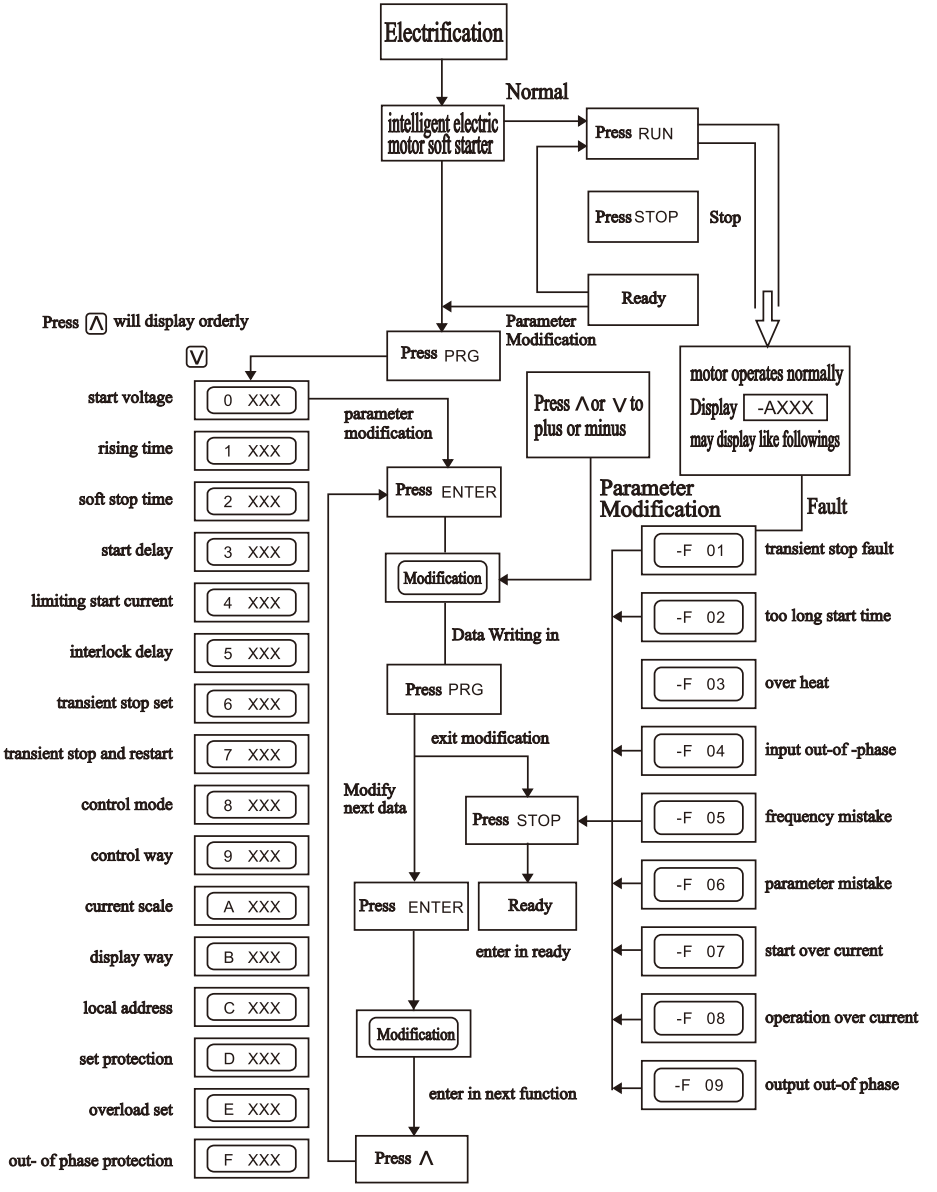

Note: X means modifiable number 0-9; Y means function code 0-F;

Ⅶ.Electrification and Operation

The following operation may be followed after connection.

1)Trial Run

- The main purpose of the trial run is for the customer to confirm whether the turning and running of the electric motor is normal or not.
- Joint incoming line breaker，displays “EEE” in normal condition.
- Well adjust the each parameter of the soft starter according to temporal motor load condition, and make the torque in the best condition(see Ⅻ).
- Observe whether the motor's running direction and the running are accordance with the requirement or not at the time of pressing RUN key, press STOP to stop the operation in case of abnormality.
- If the torch is not enough, please plus the start voltage value or limiting current value to enhance the motor's torch.
- We can use the following ways to check whether the soft starter is in normal condition, three bulbs should become light gradually and stably in normal condition.

1.Take three 100W bulbs and connect one terminal parallelly.

2.Introduce the soft starter three-phase to connect to the other terminal of the three bulbs, the bulbs should be higher than 100W.

1)Operation

Set the parameter according to load condition.

- Press Run key ,(use terminal signal when outer control) the starter start to operate, if the motor speeds up stably ,it indicates the parameter set is suitable.
- Press STOP key (use terminal signal when outer control)after operation to stop running.

Ⅷ. Illumination for Fault Display

The YCQR2 series Soft Starter owns several protections, it can stop running for any fault and display the fault hint.

Panel Display	Fault Functional Code	Fault Reason& Elimination
Transient stop	-F 01	Transient stop terminal 7,open circuit to terminal 10
Too long start time	-F 02	The limiting current is to low to make the start time too long (≥60s)
Over heat	-F 03	Too frequent start, cut down the start times
Input out-of-phase	-F 04	Check the performance of incoming line, power supply, motor connection and silicon controlled
Frequency mistake	-F 05	Check the power supply frequency
Parameter mistake	-F 06	Restart or rewrite in factory data
Start over current	-F 07	Overload, the current exceeds 500% times
Operation over current	-F 08	Modify the parameter to cut down the load
Output out-of-phase	-F 09	Check the incoming and outgoing cable

Restart only after pressing the Reset key to eliminate the fault.

Ⅸ. Soft Start Control Mode

Soft Start Control Mode

1)Limiting Current Mode

It can make the limiting current value Im not exceed set value at the time of motor start, the Im can be made according to the customer's network capability and motor load condition, this value should be chosen from 1.5-5.0 times of rated current I e. (See picture 9.1)

picture 9.1

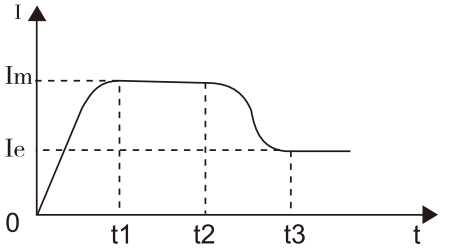

picture 9.1

1)Voltage Ascending Start Mode

Voltage ascending start mode completes the start by setting the ascending speed rate of the motor input voltage, as the voltage value ascending changes from the original one to the rated one（the original value can ensure the maximum start moment）, the whole start proceed ensures the motor's stable start, the value should be chosen from 30%-80% of rated voltage U e.(see picture 9.2)

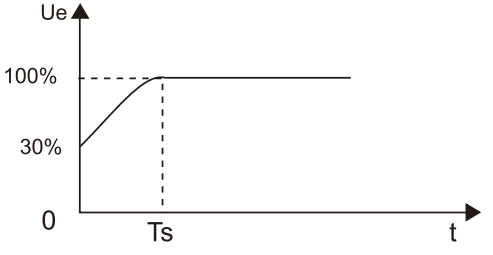

picture 9.2

3)Soft Stop Way and It's Curve

a.Free Stop: Stop freely by load inertia.

b.Soft Stop: In some occasions, the motor is not expected to stop suddenly, some motors adopts soft stop such as belt feeder， elevator etc, the voltage of the motor reduces gradually when the stop signal is sent(set by functional code 2), which realizes soft stop running. (see picture 9.3)

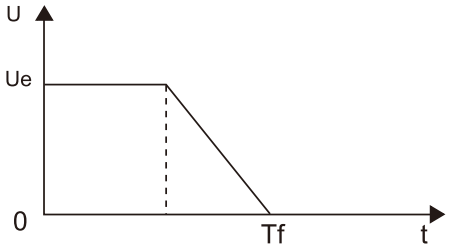

see picture 9.3

4)Current Wave Form Comparison of Different Start Mode

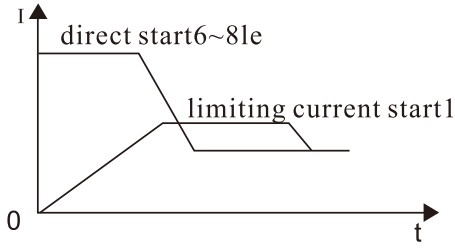

see picture 9.3

X. Structure Characteristic

Natural wind cooling doesn't need mechanical ventilation in the switch cabinet and special requirement for electrical appliance arrangement.

2)Plane Structure Picture and Size（see picture 10.1 and 10.2）

Plane Structure Picture of YCQR2 -5000 55KW Type

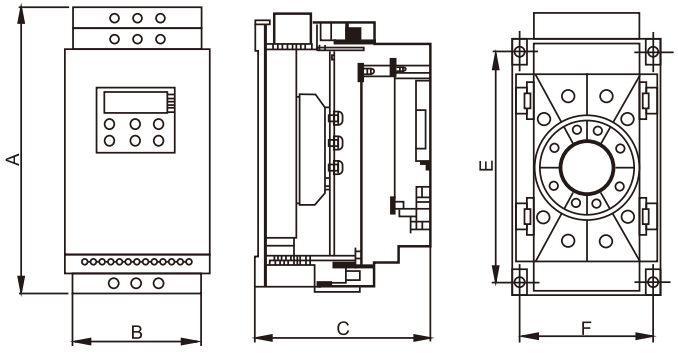

picture 10.1

Structure Size of YCQR2-5000 55KW Type

Model	Power (KW)	Rated Current (A)	Outline Size(mm)			Installing Size (mm)		Installing Hole Dimension
			A	B	C	E	F	
YCQR2	5.5-22	10-40	265	154	165	219	140	Φ6
YCQR2	30	54	265	154	165	219	140	Φ6
YCQR2	37	68	265	154	165	219	140	Φ6
YCQR2	45	80	265	154	165	219	140	Φ6
YCQR2	55	100	265	154	165	219	140	Φ6

Plane Structure Picture of YCQR2-5000 75-600KW Type

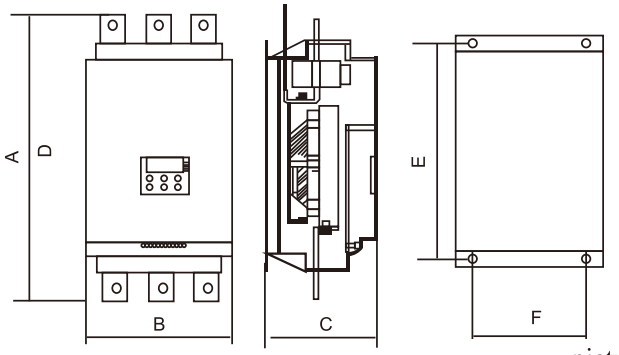

picture 10.2

Structure Size of YCQR2-5000 75-600KW Type

Model	Power (KW)	Rated Current (A)	Outline Size(mm)			Installing Size (mm)		Installing Hole Dimension
			A	B	C	E	F	
YCQR2	75	135	531	260	204	380	230	Φ8
YCQR2	90	160	531	260	204	380	230	Φ8
YCQR2	115	200	531	260	204	380	230	Φ8
YCQR2	132	250	531	260	204	380	230	Φ8
YCQR2	160	300	531	260	204	380	230	Φ8
YCQR2	200	360	564	290	204	260	260	Φ8
YCQR2	250	450	564	290	204	260	260	Φ8
YCQR2	320	560	564	290	204	260	260	Φ8
YCQR2	400	800	600	350	220	480	320	Φ8
YCQR2	500	1000	600	350	220	480	320	Φ8
YCQR2	600	1200	600	350	220	480	320	Φ8

XI..Main Technical Parameter of YCQR2Series Soft Starter

Electric motor power(400v.h)/kw	5.5~600kw
Rated working current Ie/A	10-1200
Rated working voltage / V	~380V(-15%~10%)
Frequency /Hz	50Hz
Continuous working current /A	115%Ie
Rated control voltage/V	AC 220V~240V/50Hz
Ambient temperature /℃	30℃/55℃

XII. Applicable Occasion (for customer reference)

Machine Type	Load Type	Load Type		Start Mode		Start Time (S)
		Voltage	Current	Voltage(%)	Current(%)	
centrifugal pump	Standard		●		250	
Ventilator	Over weight	●		55		15
Compressor (piston type)	standard		●		300	
Compressor (centrifugal type)	standard	●		45		12
transporter	standard		●		250	
Mixer	standard		●		350	
Ball Mill	heavy type	●		50		20
Crusher	Heavy type		●		400	

Set according to temporal load.

XIII. Basic Connection Principle Chart

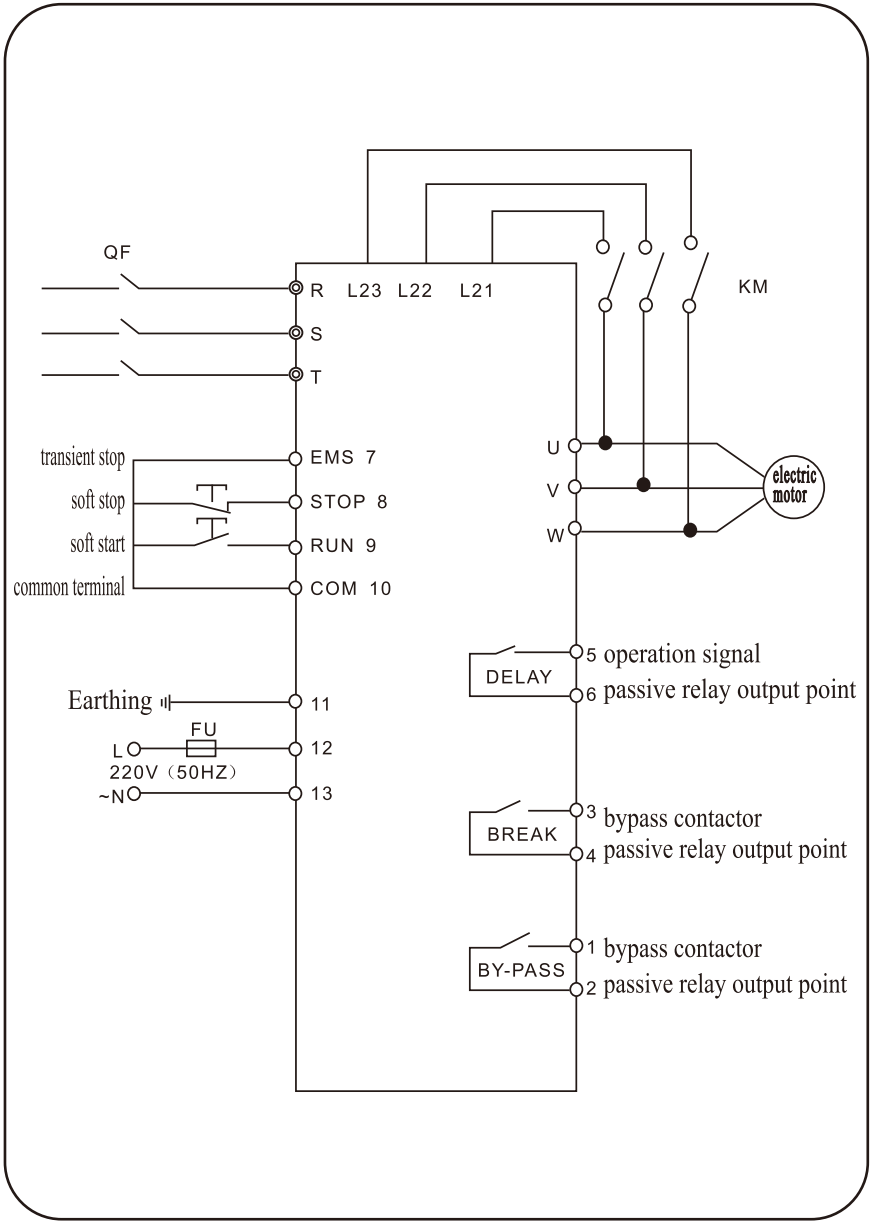

XIV. Secondary Connection Chart

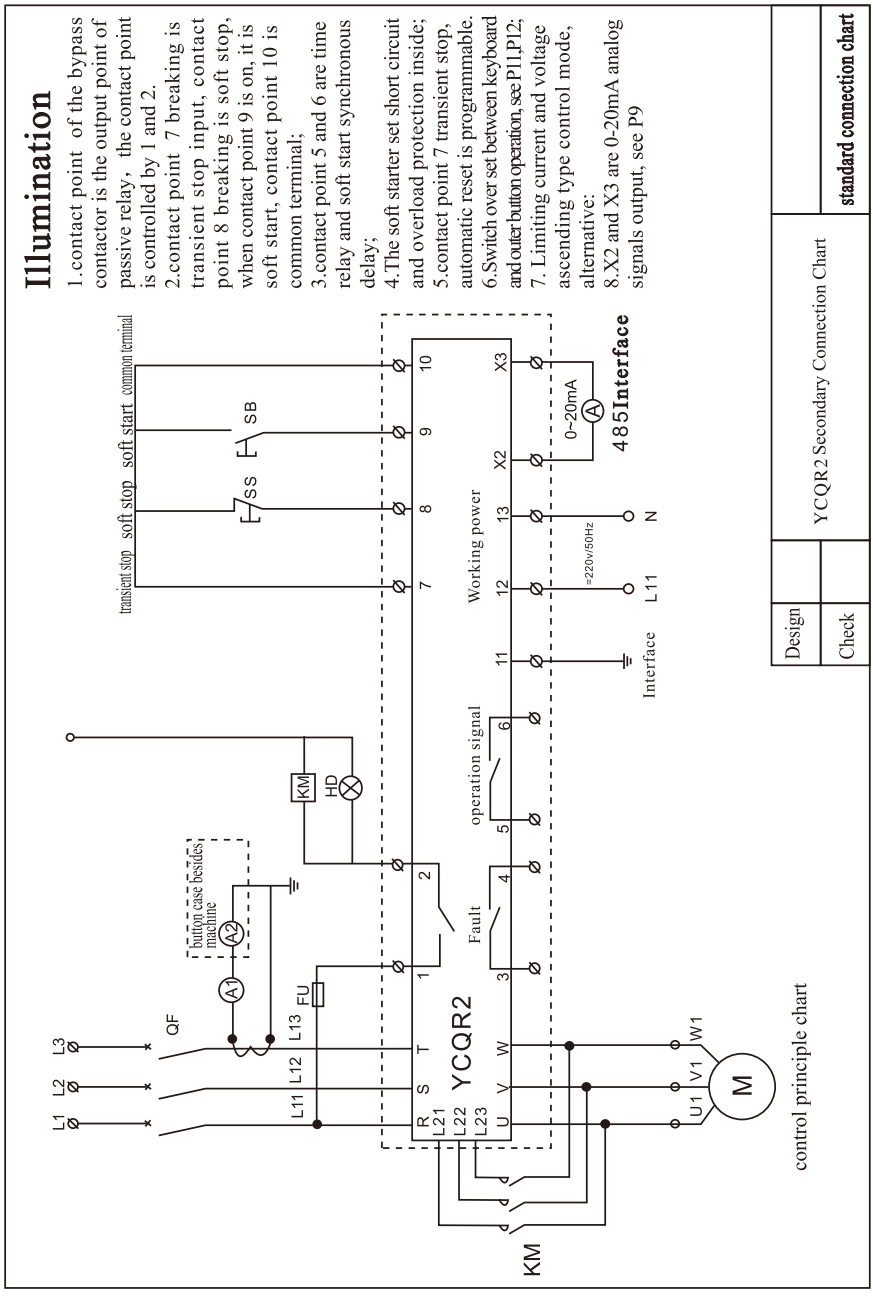

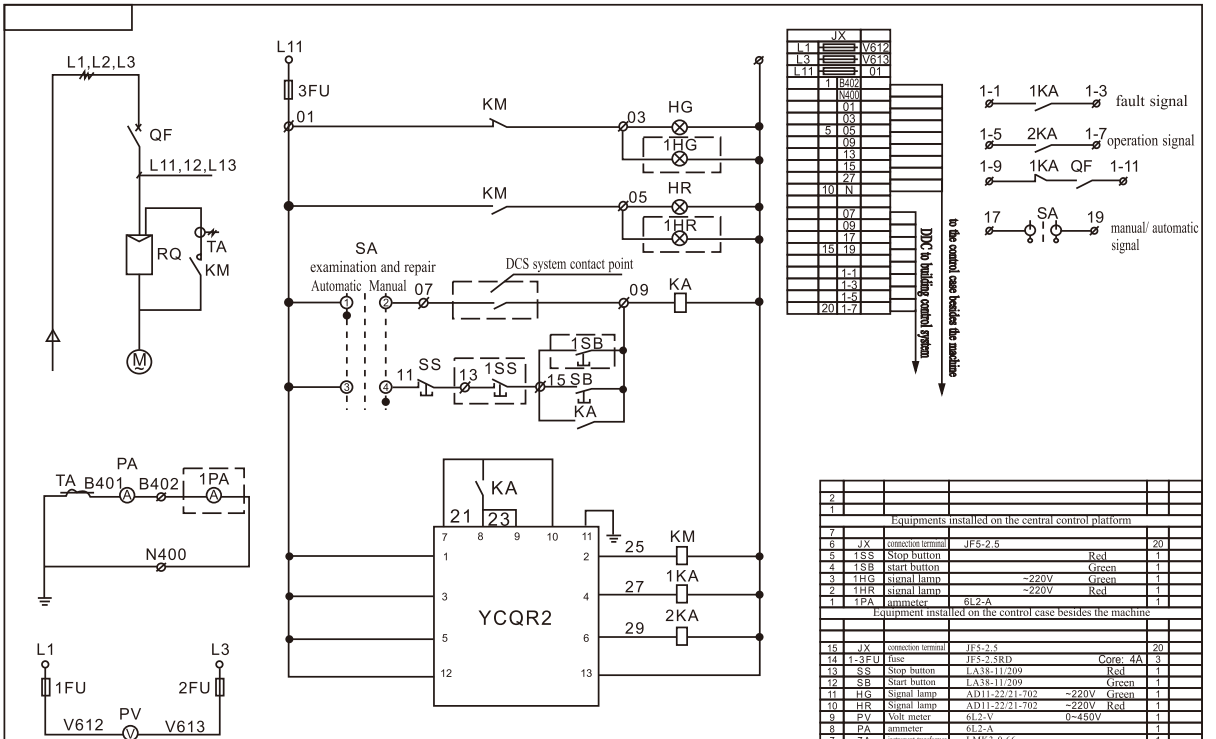

Illumination:
1.This chart is a working principle chart of one set soft starter;
2.It owns manual and automatic change over switch;
Contact point 1KA, 2KA, SA introduce DCS automatic control system;

2					
1					
Equipments installed on the central control platform					
7					
6	JX	connection terminal	JF5-2.5		20
5	1SS	Stop button		Red	1
4	1SB	start button		Green	1
3	1HG	signal lamp	~220V	Green	1
2	1HR	signal lamp	~220V	Red	1
1	1PA	ammeter	6L2-A		1
Equipment installed on the control case besides the machine					
15	JX	connection terminal	JF5-2.5		20
14	1-3FU	fuse	JF5-2.5RD	Core: 4A	3
13	SS	Stop button	LA38-11/209	Red	1
12	SB	Start button	LA38-11/209	Green	1
11	HG	Signal lamp	AD11-22/21-702 ~220V	Green	1
10	HR	Signal lamp	AD11-22/21-702 ~220V	Red	1
9	PV	Volt meter	6L2-V	0~450V	1
8	PA	ammeter	6L2-A		1
7	TA	instrument transformer	LMK3-0.66		1
5	1-2KA	auxiliary relay	JZC4-40	-220V	2
4	KA	auxiliary relay	JZC4-40	-220V	1
3	KM	AC contactor	3TF	-220V	1
2	RQ	soft start device	FKR1-□/X	Power: □KW	1
1	QF	circuit breaker	CM1-□/3300	Ie: □A	1

YCQR2
FKR1 Soft Start Cabinet Principle Chart(II)

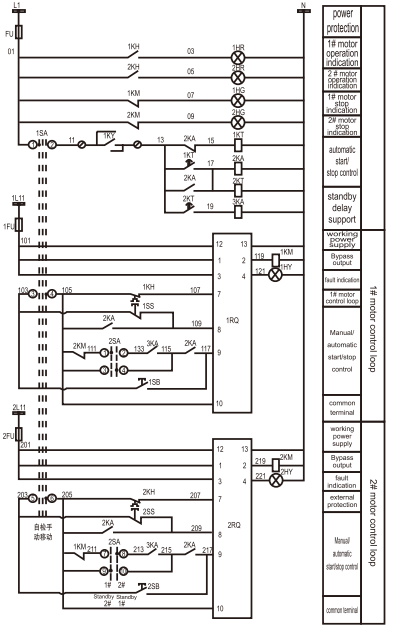

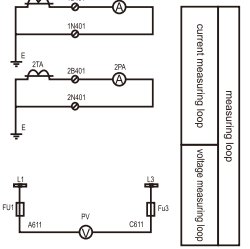

A611	FU1	L1
C611	Fu3	L3
01	FU	L1
101	1FU	L1
201	2FU	L1

XT

1B401		1	1B401
1N01		2	1N01
		3	
2B401		4	2B401
2N401		5	2N401
		6	
03		7	03
05		8	05
07		9	07
09		10	09
11		11	11
13		12	13
		13	
105		14	105
109		15	109
111		16	111
113		17	113
115		18	115
121		19	121
		20	
205		21	205
209		22	209
211		23	211
213		27	213
215		25	215
221		26	221
N		27	N
		28	

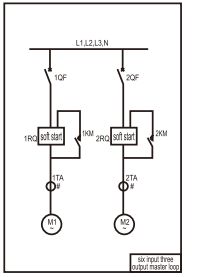

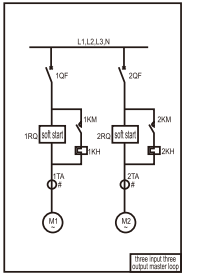

Illumination

1.This chart is one use one standby type electric principle chart.

2.Don't use six incoming lines soft starter and thermal relay 1KH, 2KH, terminal 7 and 10 short connection.

3.Change over switch 1SA is in the manual position, two sets of soft starters can tart separately.

4.It must use over current type ammeter.

Contract No.				Cabinet No.		
Mark	Design	Modified File No.	Signature	Date	Soft starter	Secondary Principle Chart
Design		Chen Yulu	Standardization			
check			Approval		Drawing Mark	Weight / Proportion
Confirmation		Lin Fuyang				One Use One Standby (booster pump)
Craftwork			Date	2007.03	totally pages / Page	

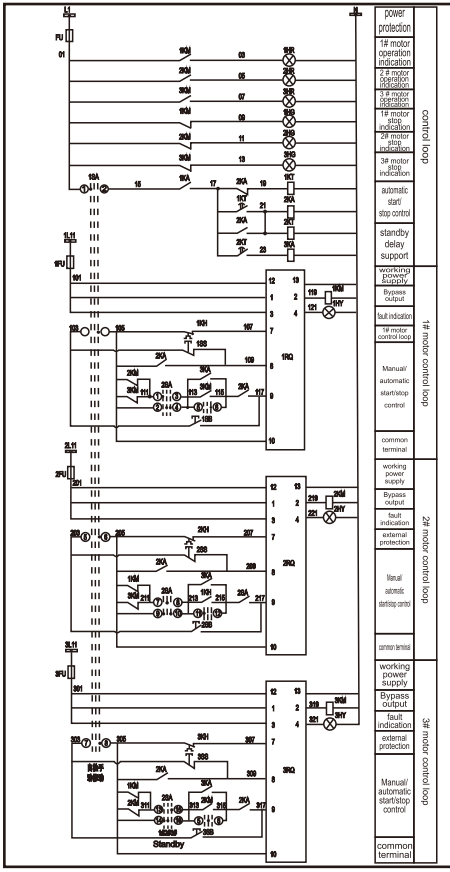

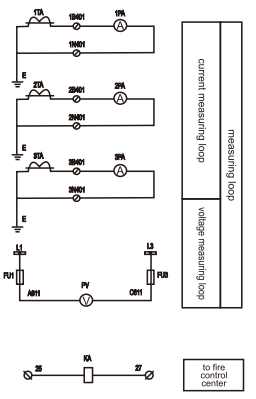

A611	FU1	L1引出1QF上端A611
C611	FU3	L3引出1QF上端A611
01	FU	L1引出1QF下端A611
101	1FU	1L1引出1QF下端A611
201	2FU	2L1引出2QF下端A611
301	3FU	3L1引出3QF下端A611

1B401	1	1B401
1N401	2	1N401
	3	
2B401	4	2B401
2N401	5	2N401
	6	
3B401	7	3B401
3N401	8	3N401
	9	
03	10	03
05	11	05
07	12	07
09	13	09
11	14	11
13	15	13
15	16	15
25	17	25
27	18	27
	19	
105	20	105
109	21	109
111	22	111
113	23	113
115	24	115
117	25	117
121	26	121
	27	
205	28	205
209	29	209
211	30	211
213	31	213
215	32	215
217	33	217
221	34	221
	35	
305	36	305
309	37	309
311	38	311
313	39	313
315	40	315
317	41	317
321	42	321
N	43	N
	44	

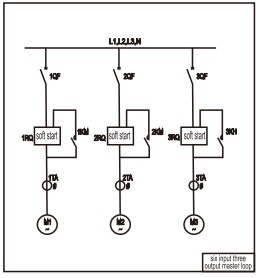

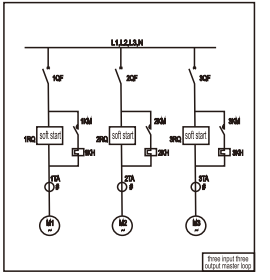

Illumination

1.This chart is for two use one standby type electric principle chart.
2. Don't use six incoming lines soft starter and thermal relay 1KH, 2KH, 23KH, terminal 7 and 10 short connection.
3.Change over switch 1SA is in manual position, three sets of soft starters can start separately.
4.It must use over current type ammeter.
5.1KA auxiliary relay can choose suitable class voltage type according to different controlling occasion.

Contract No.				Cabinet No.	
Mark	Design	Modified File No.	Signature	Date	Soft starter
Design		Chen Yulu	Standardizator		Secondary Principle Chart
check			Approval		
Confirmation		Lin Fuyang			Drawing Mark / Weight / Proporter
Craftwork			Date	2007.03	totally pages / Page

One Use One Standby (booster pump)

XV. Fault Elimination

1) The electric motor vibrates as no start signals.
Check silicon controlled and modules, side-pass contact at connected
2) When electric motor start fails:
2-1) Terminal No.12 and No.13 connected to work voltage
2-2) Check start signal (when loop of Terminal No. 10 and No. 8 connected, whether Terminal No.10 and No.9 connected)
2-3) The start signal and stop signal should not be synchronous.
2-4) Check power frequency
2-5) Whether the master power is connected to Terminal R S T
2-6) Check all connection
2-7) Reset, make stop signal or cutoff voltage of terminal No.12 and No.13
2-8) Check whether soft starter is over thermal, if soft start is hot, the fault will still exit after reset.
2-9) External fault input open circuit? Check whether thermal overload relay is tripped.
2-10) If the starter fault at 60-70s after start signal sent out, and the soft starter voltage-ascend fails, check all connections. (Reset, make stop signal or cut off voltage of terminal No.12 and No.13)
3) Electric motor stops in running.
3-1) Whether master loop is out-of-phase? Whether circuit breaker is disc onnected? Whether the fuse is fault, also check all connections.
3-2) Stop running fault. Whether by-pass contact is connected? Whether loads are out-of-phase? And check the connection.
4) Electric motor sound abnormal during start and running
When it is over voltage and small current is required, please refer to technical parameters. Whether the by-pass contact connects wrong? Whether power upply and load is out of phase? Check connection.
5) When it stops, the electric motor sound abnormal, or anticipated stop happens, try to pause differently. (In order to make idea performance, make several adjustments, check power supply and load side and connection)
6) Limiting current adjustment is not available: check value of functional code 04 and 08. Check whether soft starter matches electric motor.

CNC
ELECTRIC

CERTIFICATE

Product Model: YCQR2 Series

Standard : GB 14048.6

Inspector : CNC009

Production date: Printed on the product or package

This product is qualified after delivery inspection

CNC YCQR2 Series

CNC ELECTRIC

Tel: 0086-577-61989999 Fax: 0086-577-61891122

www.cncele.com E-mail: cncele@cncele.com